KUB

IMF8-1A-30H(H111)

Application

KUB low power luminaire is designed primarily for accent lighting of facade elements.
The compact dimensions make it possible to place KUB on columns, visors, in narrow inter-window spaces, on decorative details. A unique adjustment system allows you to quickly mount and adjust the luminaire using a regular hexagon screwdriver.

Light source	Cree (USA)
Light color	Amber
CRI	≥ 80
Luminous flux	310 lm
Optics	30°
Pulsation coefficient	5%
Voltage	AC 230 V, (50±1) Hz
Power input	10 W
Power factor Cos	0,9
Control	No
Electrical class	I (first)
Operating temperature:	
-for standard edition	-40 °C...+45 °C
-for tropic edition	-40 °C...+55 °C
Lifespan	Not less than 50 000 hours
Warranty	3-5 years
Weight	1,3 kg
Dimensions	171x104x100 mm (with bracket)
Materials	housing, bracket: aluminum alloy; mounts: stainless steel; silicate tempeted glass
Mounting	on an adjustable bracket
Accessories	shield
Customization	diffuser glass; internal honeycomb louvre; customized LEDs color combinations; control/power cables of any length up to 3 m; housing and accessories painting in any RAL color; IP68 connectors
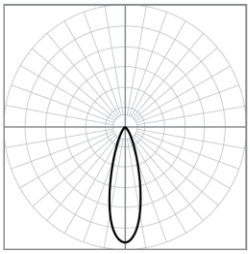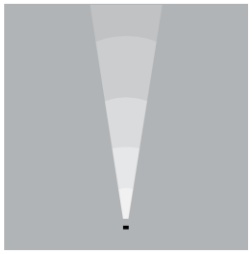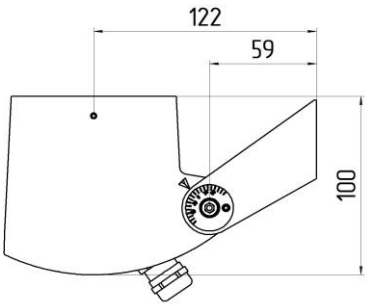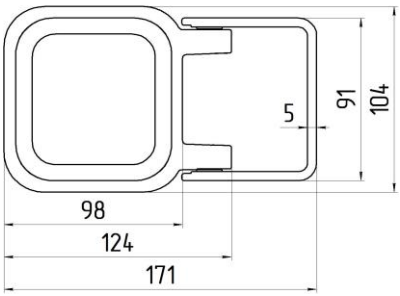
IP66 IK08