RAY

IMF20-1RGBA-30CH(311)

Application
RAY luminaire is designed for flood and accent architectural lighting.

Light source	Cree (USA)
Light color	Red + Green + Blue + Amber
CRI	≥ 80
Luminous flux:	
- for «RGBA»	590 lm
- for «RGB»	410 lm
- for «R»	130 lm
- for «G»	205 lm
- for «B»	71 lm
- for «A»	180 lm
Optics	30°
Pulsation coefficient	5%
Voltage	AC 230 V, (50±1) Hz
Power input	26 W
Power factor Cos	0,95
Control	DMX
Electrical class	I (first)
Operating temperature:	
-for standard edition	-40 °C...+45 °C
-for tropic edition	-40 °C...+55 °C
Lifespan	Not less than 50 000 hours
Warranty	3-5 years
Weight	2 kg
Dimensions	290x140x94 mm (with bracket)
Materials	Device enclosure: aluminum alloy; protective glass: tempered glass; mounting arms: cast aluminum alloy covered with powder paint to fit the luminaire color; mounts: stainless steel
Mounting	On an adjustable bracket
Accessories	Blind, lattice
Customization	Diffuser glass, internal honeycomb lattice, control/power cables of any length up to 3 m, housing and accessories painting in any RAL color, production of customized accessories, IP68 connectors
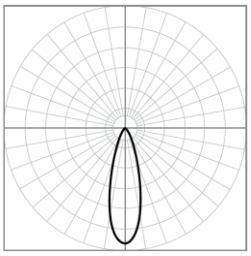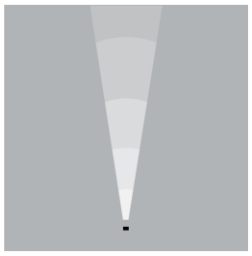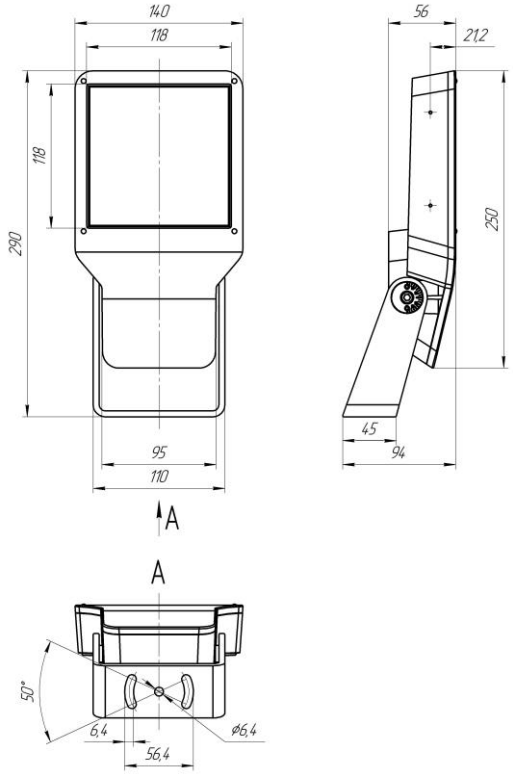
IP65 IK08